YKK AP AMERICA, Inc.

50HL LOW PRESSURE OUTSWING ENTRANCE DOORS (WZ3) (IMPACT)

INSTALLATION NOTES:

1. ONE (1) INSTALLATION ANCHOR IS REQUIRED AT EACH ANCHOR LOCATION SHOWN.
2. THE NUMBER OF INSTALLATION ANCHORS DEPICTED IS THE MINIMUM NUMBER OF ANCHORS TO BE USED FOR PRODUCT INSTALLATION.
3. INSTALL INDIVIDUAL INSTALLATION ANCHORS WITHIN A TOLERANCE OF ±1/2 INCH OF THE DEPICTED LOCATION IN THE ANCHOR LAYOUT DETAIL (I.E., WITHOUT CONSIDERATION OF TOLERANCES). TOLERANCES ARE NOT CUMULATIVE FROM ONE INSTALLATION ANCHOR TO THE NEXT.
4. SHIM AS REQUIRED AT EACH INSTALLATION ANCHOR WITH LOAD BEARING SHIM(S). MAXIMUM ALLOWABLE SHIM STACK TO BE 3/8 INCH. SHIM WHERE SPACE OF 1/16 INCH OR GREATER OCCURS. SHIM(S) SHALL BE CONSTRUCTED OF HIGH DENSITY PLASTIC OR BETTER.
5. FOR INSTALLATION INTO WOOD FRAMING USE *#14 WOOD SCREWS* OF SUFFICIENT LENGTH TO ACHIEVE 1 1/2 INCH MINIMUM EMBEDMENT INTO WOOD SUBSTRATE.
6. FOR INSTALLATION THROUGH 1X BUCK TO CONCRETE/MASONRY, OR DIRECTLY INTO CONCRETE/MASONRY, USE *1/4 INCH DIAMETER ITW TAPCONS* OF SUFFICIENT LENGTH TO ACHIEVE 1 1/4 INCH MINIMUM EMBEDMENT.
7. FOR INSTALLATION THROUGH METAL FRAME USE *1/4 INCH DIAMETER SELF-TAPPING SCREW* OF SUFFICIENT LENGTH TO ACHIEVE *3 THREADS* MINIMUM PENETRATION BEYOND METAL FRAME SUBSTRATE.
8. FOR INSTALLATION THROUGH ALUMINUM MULLION USE *1/4 INCH DIAMETER SELF-TAPPING SCREW* OF SUFFICIENT LENGTH TO ACHIEVE *3 THREADS* MINIMUM PENETRATION BEYOND ALUMINUM FRAME SUBSTRATE.
9. MINIMUM EMBEDMENT AND EDGE DISTANCE EXCLUDE WALL FINISHES, INCLUDING BUT NOT LIMITED TO STUCCO, FOAM, BRICK VENEER, AND SIDING.
10. INSTALLATION ANCHORS AND ASSOCIATED HARDWARE MUST BE MADE OF CORROSION RESISTANT MATERIAL OR HAVE A CORROSION RESISTANT COATING.
    - FASTENERS USED WITHIN 3,000 FEET OF A SALTWATER COASTLINE AND INSTALLED IN ENCLOSED SPACES SHALL BE GALVANIZED IN ACCORDANCE WITH SECTION 1711.1.1 (E.G., ASTM A153 CLASS D, ASTM A641 CLASS 3S, OR EQUIVALENT CORROSION RESISTANCE).
    - CONNECTORS AND METAL PLATES USED WITHIN 3,000 FEET OF A SALTWATER COASTLINE SHALL BE STANDARD GALVANIZED IN ACCORDANCE WITH SECTION 1711.1.2 (E.G., ASTM A653 G90, ASTM A123, OR PROTECTIVE COATING PER TPI 1).
11. FOR HOLLOW BLOCK AND GROUT FILLED BLOCK, DO NOT INSTALL INSTALLATION ANCHORS INTO MORTAR JOINTS. EDGE DISTANCE IS MEASURED FROM FREE EDGE OF BLOCK OR EDGE OF MORTAR JOINT INTO FACE SHELL OF BLOCK.
12. INSTALLATION ANCHORS SHALL BE INSTALLED IN ACCORDANCE WITH ANCHOR MANUFACTURER'S INSTALLATION INSTRUCTIONS, AND ANCHORS SHALL NOT BE USED IN SUBSTRATES WITH STRENGTHS LESS THAN THE MINIMUM STRENGTH SPECIFIED BY THE ANCHOR MANUFACTURER.
13. INSTALLATION ANCHOR CAPACITIES FOR PRODUCTS HEREIN ARE BASED ON SUBSTRATE MATERIALS WITH THE FOLLOWING PROPERTIES:
    A. WOOD - MINIMUM SPECIFIC GRAVITY OF 0.55.
    B. CONCRETE -MINIMUM COMPRESSIVE STRENGTH OF 3000 PSI.
    C. MASONRY - STRENGTH CONFORMANCE TO ASTM C-90.
    D. STEEL - MINIMUM YIELD STRENGTH OF 33 KSI. MINIMUM 18 GA. WALL THICKNESS.
    E. ALUMINUM - MINIMUM 1/16 INCH THICK 6063-T5 ALUMINUM.

GENERAL NOTES:

1. THE PRODUCT SHOWN HEREIN IS DESIGNED AND MANUFACTURED TO COMPLY WITH THE CURRENT FLORIDA BUILDING CODE (FBC), EXCLUDING HVHZ AND HAS BEEN EVALUATED ACCORDING TO THE FOLLOWING:
    - TAS 201-94
    - TAS 202-94
    - TAS 203-94
    - ASTM E1886-19
    - ASTM E1996-23
2. ADEQUACY OF THE EXISTING STRUCTURAL CONCRETE/MASONRY, 2X FRAMING AND METAL STUD FRAMING AS A MAIN WIND FORCE RESISTING SYSTEM CAPABLE OF WITHSTANDING AND TRANSFERRING APPLIED PRODUCT LOADS TO THE FOUNDATION IS THE RESPONSIBILITY OF THE ENGINEER OR ARCHITECT OF RECORD FOR THE PROJECT OF INSTALLATION.
3. 1X AND 2X BUCKS (WHEN USED) SHALL BE DESIGNED AND ANCHORED TO PROPERLY TRANSFER ALL LOADS TO THE STRUCTURE. BUCK DESIGN AND INSTALLATION IS THE RESPONSIBILITY OF THE ENGINEER OR ARCHITECT OF RECORD FOR THE PROJECT OF INSTALLATION.
4. THE INSTALLATION DETAILS DESCRIBED HEREIN ARE GENERIC AND MAY NOT REFLECT ACTUAL CONDITIONS FOR A SPECIFIC SITE. IF SITE CONDITIONS CAUSE INSTALLATION TO DEVIATE FROM THE REQUIREMENTS DETAILED HEREIN, A LICENSED ENGINEER OR ARCHITECT SHALL PREPARE SITE SPECIFIC DOCUMENTS FOR USE WITH THIS DOCUMENT.
5. APPROVED IMPACT PROTECTIVE SYSTEM **IS NOT REQUIRED** ON THIS PRODUCT IN AREAS REQUIRING IMPACT RESISTANCE IN WIND ZONES 3 OR LESS.
6. APPROVED IMPACT PROTECTIVE SYSTEM **IS REQUIRED** ON THIS PRODUCT IN AREAS REQUIRING IMPACT RESISTANCE IN WIND ZONES 4.
7. DOOR FRAME MATERIAL: ALUMINUM 6063-T5
8. ALL STRUCTURAL MATERIALS & DISSIMILIAR METALS SHALL BE PROTECTED, TREATED, PAINTED, COATED, AND/OR ISOLATED AS REQUIRED IN THE APPLICABLE SECTIONS OF THE CURRENT FLORIDA BUILDING CODE AND REFERENCED DESIGN SPECIFICATIONS.
9. GLASS SHALL MEETS THE REQUIREMENTS OF ASTM E 1300 GLASS CHARTS. SEE SHEETS 7, 8 & 9 FOR GLAZING DETAILS.
10. DOOR CONFIGURATIONS MAY UTILIZE BUTT HINGES AS DESCRIBED HEREIN OR OFFSET PIVOTS INTERCHANGEABLY.
11. ALLOWABLE CONFIGURATIONS: X (SINGLE DOOR) OR XX (DOUBLE DOOR) WITH OR WITHOUT TRANSOMS AND/OR SIDELITES.

TABLE OF CONTENTS

SHEET	SHEET DESCRIPTION
1	INSTALLATION & GENERAL NOTES
2	ELEVATIONS & ANCHOR LAYOUTS
3	VERTICAL SECTIONS
4	HORIZONTAL SECTIONS
5	HORIZONTAL & VERTICAL SECTIONS (1)
6	HORIZONTAL & VERTICAL SECTIONS (2)
7	GLAZING DETAILS (1)
8	GLAZING DETAILS (2)
9	GLAZING DETAILS (3)
10	COMPONENTS & BILL OF MATERIALS
11	COMPONENTS & BILL OF MATERIALS (CONTINUED)

DESIGN PRESSURE TABLE

GLAZING TYPES	MAX. PANEL SIZE	MAX. DP	IMPACT RATING
A, B, E, F, I, J	41 13/16" X 83 3/16"	+50/-50 PSF	LMI & SMI
C, D, G, H	41 13/16" X 83 3/16"	+50/-50 PSF	SMI ONLY

NOTES:
1. LMI - LARGE MISSILE IMPACT RATED
2. SMI - SMALL MISSILE IMPACT RATED
3. SEE SHEETS 7, 8 & 9 FOR GLAZING DETAILS

NOTE: WHERE WATER INFILTRATION REQUIREMENTS NEED TO BE MET PRODUCT SHALL BE USED WHEN INSTALLED AT LOCATION PROTECTED BY OVERHANG SUCH THAT OVERHANG (OH) RATIO = OH LENGTH ÷ OH HEIGHT IS ≧1.0

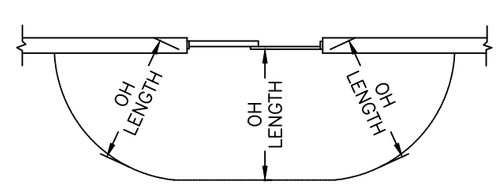

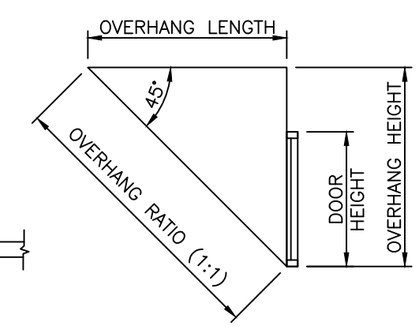

YKK AP AMERICA, Inc.
101 MARIETTA STREET NW, SUITE 2100
ATLANTA, GA 30303
PH: (478)277-1955 FAX: (678)838-6001

TITLE: 50HL LOW PRESSURE OUTSWING ENTRANCE DOOR (WZ3) (IMPACT) INSTALLATION & GENERAL NOTES

PREPARED BY: BUILDING DROPS, INC.
1900 NE MIAMI COURT, STE. 2-15
MIAMI, FL 33132
PH: (954)399-8478
FAX: (954)744.4738
WEB: www.buildingdrops.com

REMARKS	BY	DATE
2026 CODE UPDATE	SH	07.31.26

THE INSTALLATION DETAILS DESCRIBED HEREIN ARE GENERIC AND MAY NOT REFLECT ACTUAL CONDITIONS FOR A SPECIFIC SITE. IF SITE CONDITIONS CAUSE INSTALLATION TO DEVIATE FROM THE REQUIREMENTS DETAILED HEREIN, A LICENSED ENGINEER OR ARCHITECT SHALL PREPARE SITE SPECIFIC DOCUMENTS FOR USE WITH THIS DOCUMENT.

Digitally signed by Hermes F. Norero, P.E.
Reason: I am approving this document
Date: 2026.08.06 10:08:07 -04'00'

HERMES F. NORERO LICENSE No. 73778 STATE OF FLORIDA PROFESSIONAL ENGINEER

HERMES F. NORERO, P.E.
LICENSE No. 73778
BUILDING DROPS, INC
1900 NE MIAMI COURT, STE. 2-15
MIAMI, FL 33132
FBPE CERT. OF AUTHORIZATION No. 29578

FL #: FL16981

DATE: 04.15.14

DWG. BY: TJM | CHK. BY: HFN

SCALE: NTS

DWG. #: YKK035

SHEET: 1 OF 11 | REV. A

8/5/2026 8:49 PM
c:\users\sebastianherreros\building drops, inc\building drops landing - common\projects\2026 code change\dwgs\fl16981\ykk035.dwg

8/5/2026 8:49 PM
c:\users\sebastianherreros\building drops, inc\building drops landing - common\projects\2026 code change projects\ykk ap america, inc\cc-26-0247.1 - 2026 code change\dwgs\fl16981\ykk035.dwg

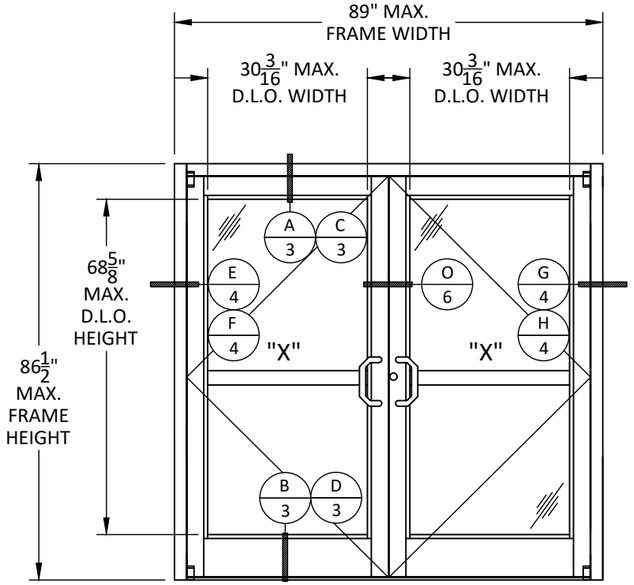

ELEVATION A
DOUBLE DOOR

HINGES QUALIFIED:		
DP RATING	IMPACT RATING	HARDWARE
+/- 50 PSF	LARGE MISSILE	• STANDARD BUTT HINGES • STANDARD OFFSET PIVOTS • ROTON 780-224HD CONTINUOUS GEARED HINGE
+/- 50 PSF	SMALL MISSILE	• STANDARD BUTT HINGES • STANDARD OFFSET PIVOTS • ROTON 780-224HD CONTINUOUS GEARED HINGE

LOCKS QUALIFIED:		
DP RATING	IMPACT RATING	HARDWARE
+/- 50 PSF	LARGE MISSILE	• MS 1850 HOOK LOCK W/ FLUSHBOLTS FOR INACTIVE LEAF • FIRST CHOICE 3690 CVR EXIT DEVICE
+/- 50 PSF	SMALL MISSILE	• MS 1850 HOOK LOCK W/ FLUSHBOLTS FOR INACTIVE LEAF • FIRST CHOICE 3690 CVR EXIT DEVICE

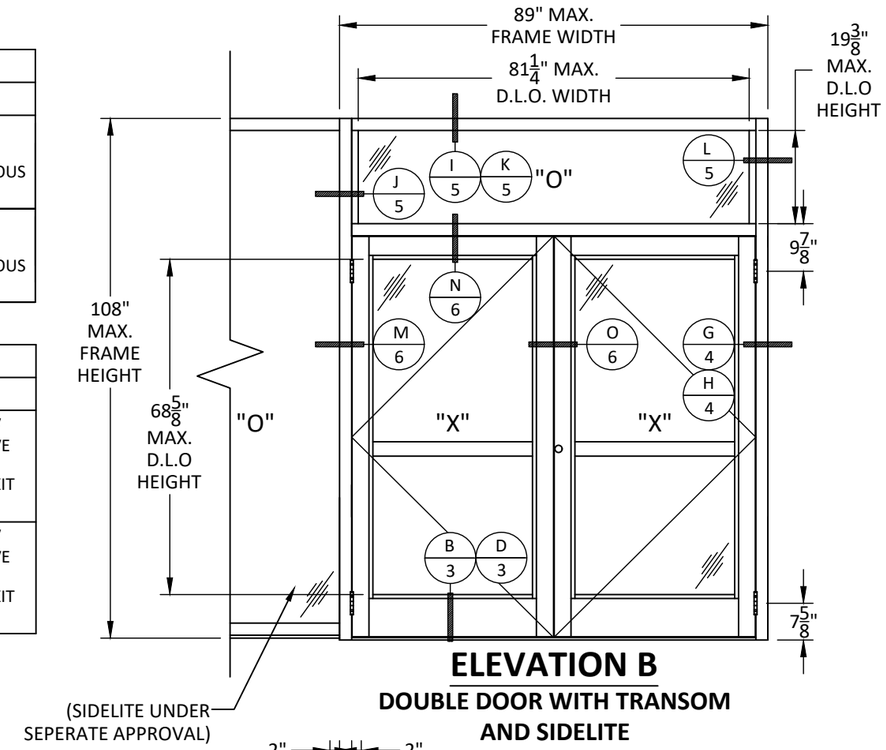

ELEVATION B
DOUBLE DOOR WITH TRANSOM AND SIDELITE

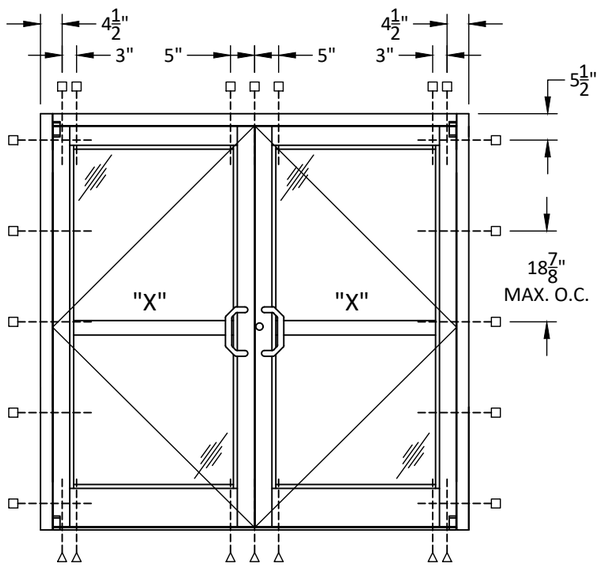

ANCHOR LAYOUT A
DOUBLE DOOR

NOTES:
1. SINGLE DOORS WITH ANY COMBINATION OF TRANSOM AND/OR SIDELITE SHOWN ARE ALSO QUALIFIED.
2. SINGLE AND DOUBLE DOORS ARE QUALIFIED SUCH THAT SINGLE DOOR UTILIZES THE HARDWARE FROM ACTIVE DOOR PANEL.

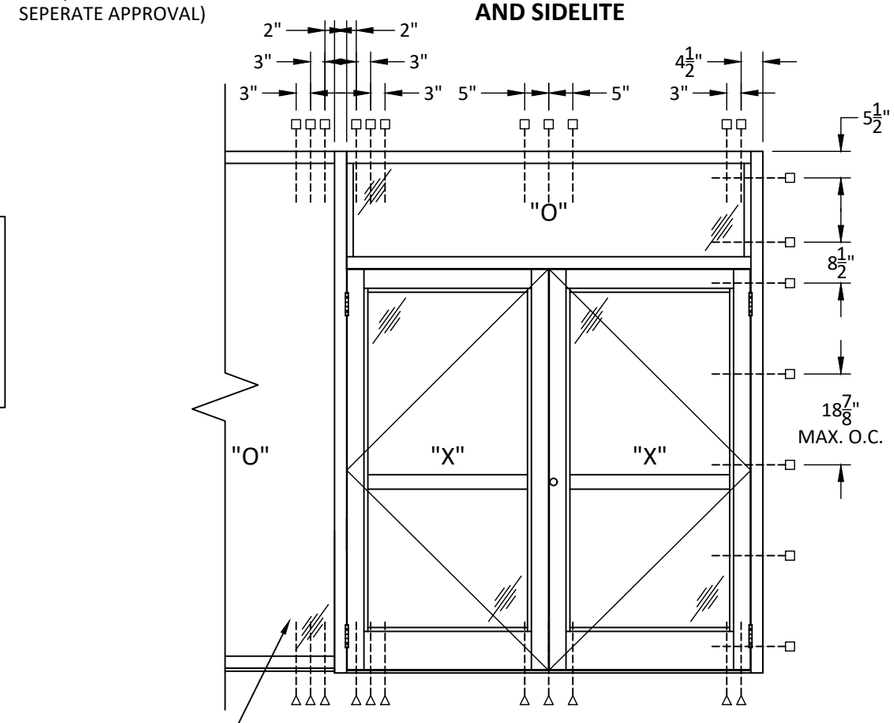

ANCHOR LAYOUT B
DOUBLE DOOR WITH TRANSOM AND SIDELITE

YKK AP AMERICA, Inc.
101 MARIETTA STREET NW, SUITE 2100
ATLANTA, GA 30303
PH: (478)277-1955 FAX: (678)838-6001

TITLE:
50HL LOW PRESSURE OUTSWING ENTRANCE DOOR (WZ3) (IMPACT)
ELEVATIONS & ANCHOR LAYOUTS

PREPARED BY:
BUILDING DROPS, INC.
1900 NE MIAMI COURT, STE. 2-15
MIAMI, FL 33132
PH: (954)399-8478
FAX: (954)744.4738
WEB: www.buildingdrops.com

REMARKS	BY	DATE
2026 CODE UPDATE	SH	07.31.26

THE INSTALLATION DETAILS DESCRIBED HEREIN ARE GENERIC AND MAY NOT REFLECT ACTUAL CONDITIONS FOR A SPECIFIC SITE. IF SITE CONDITIONS CAUSE INSTALLATION TO DEVIATE FROM THE REQUIREMENTS DETAILED HEREIN, A LICENSED ENGINEER OR ARCHITECT SHALL PREPARE SITE SPECIFIC DOCUMENTS FOR USE WITH THIS DOCUMENT.

HERMES F. NORERO
LICENSE
No. 73778
STATE OF
FLORIDA
PROFESSIONAL ENGINEER

HERMES F. NORERO, P.E.
FLORIDA P.E. No. 73778
BUILDING DROPS, INC
1900 NE MIAMI COURT, STE. 2-15
MIAMI, FL 33132
FBPE CERT. OF AUTHORIZATION No. 29578

FL #: FL16981

DATE: 04.15.14

DWG. BY: TJM | CHK. BY: HFN

SCALE: NTS

DWG. #: YKK035

SHEET: 2 | REV. A

8/5/2026 8:49 PM
c:\users\sebastianherreros\building drops, inc\building drops landing - common\projects\2026 code change projects\ykk ap america, inc\cc-26-0247.1 - 2026 code change\dwgs\f116981\ykk035.dwg

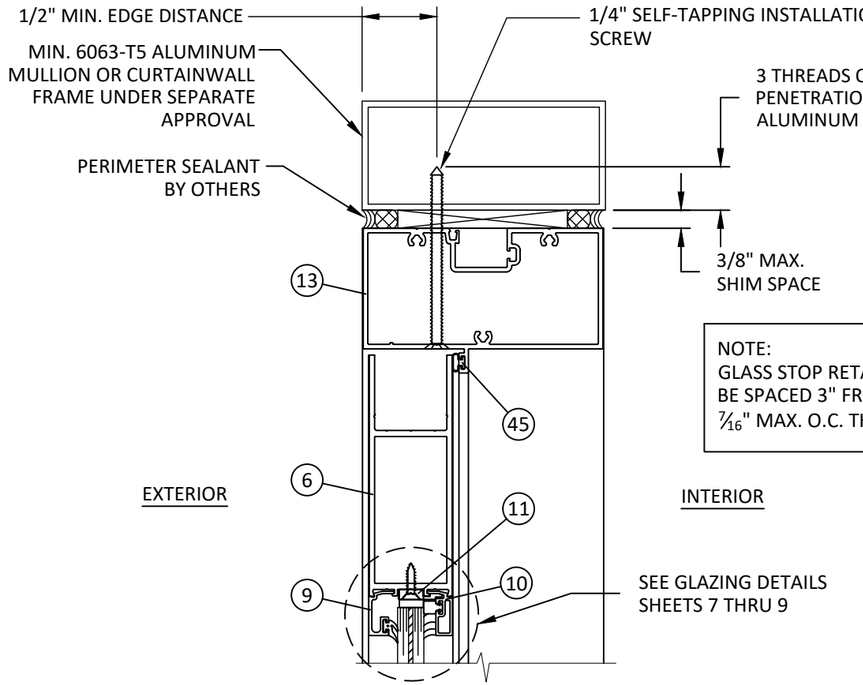

NOTE:
GLASS STOP RETAINER (ITEM #11) IS TO BE SPACED 3" FROM CORNERS AND 14 7/16" MAX. O.C. THEREAFTER.

A/3 VERTICAL SECTION

DOOR HEAD - ALUMINUM MULLION

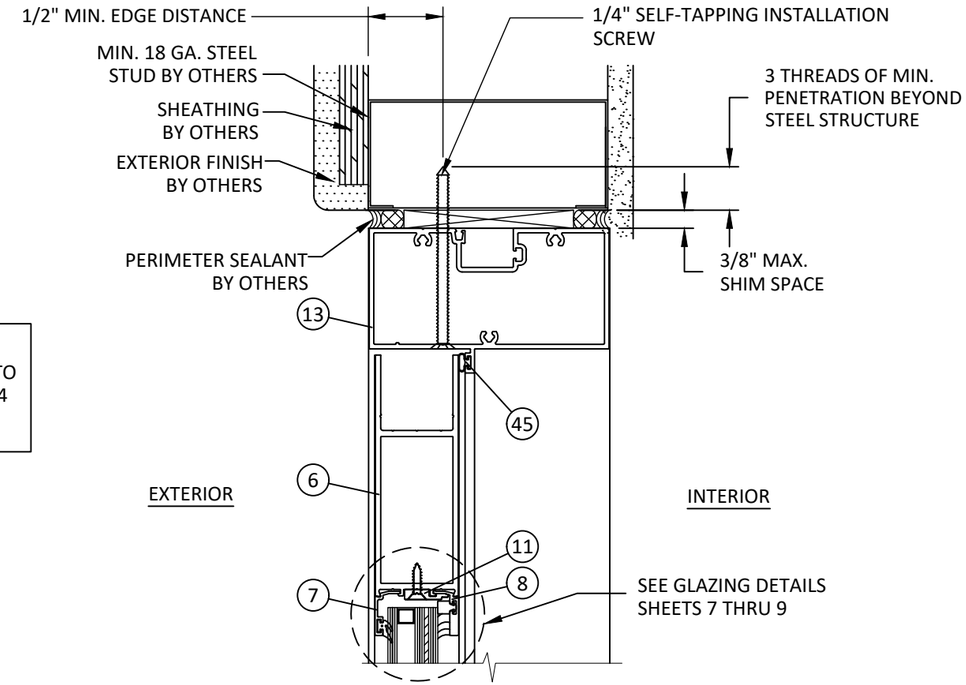

C/3 VERTICAL SECTION

DOOR HEAD - STEEL STUD

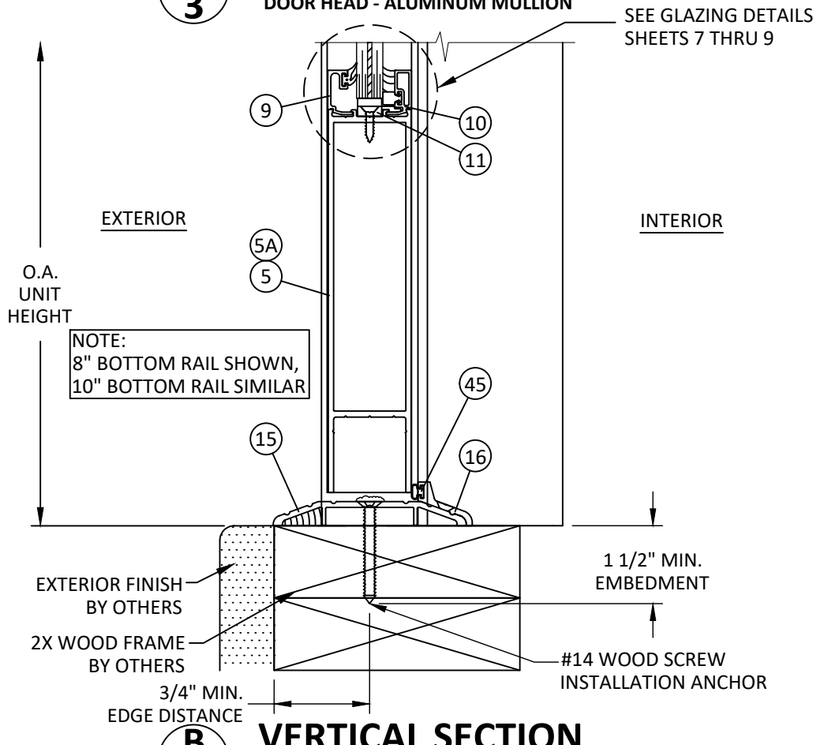

NOTE:
8" BOTTOM RAIL SHOWN, 10" BOTTOM RAIL SIMILAR

B/3 VERTICAL SECTION

BOTTOM RAIL - 2X WOOD FRAME

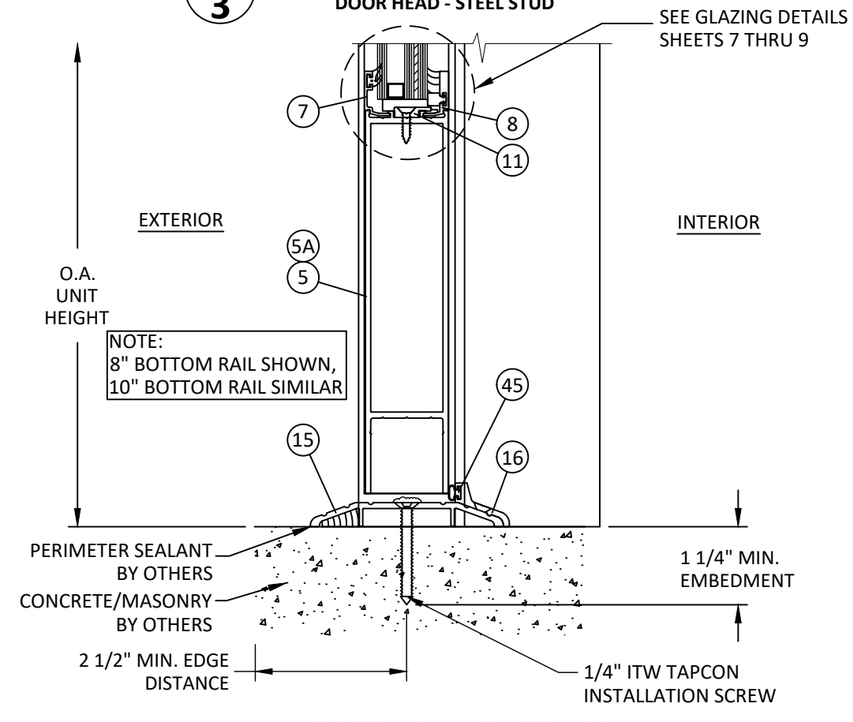

NOTE:
8" BOTTOM RAIL SHOWN, 10" BOTTOM RAIL SIMILAR

D/3 VERTICAL SECTION

BOTTOM RAIL - CONCRETE/MASONRY

YKK AP AMERICA, Inc.
101 MARIETTA STREET NW, SUITE 2100
ATLANTA, GA 30303
PH: (478)277-1955 FAX: (678)838-6001

TITLE:
50HL LOW PRESSURE OUTSWING ENTRANCE DOOR (WZ3) (IMPACT)
VERTICAL SECTIONS

PREPARED BY:
BUILDING DROPS, INC.
1900 NE MIAMI COURT, STE. 2-15
MIAMI, FL 33132
PH: (954)399-8478
FAX: (954)744.4738
WEB: www.buildingdrops.com

REMARKS	BY	DATE
2026 CODE UPDATE	SH	07.31.26

THE INSTALLATION DETAILS DESCRIBED HEREIN ARE GENERIC AND MAY NOT REFLECT ACTUAL CONDITIONS FOR A SPECIFIC SITE. IF SITE CONDITIONS CAUSE INSTALLATION TO DEVIATE FROM THE REQUIREMENTS DETAILED HEREIN, A LICENSED ENGINEER OR ARCHITECT SHALL PREPARE SITE SPECIFIC DOCUMENTS FOR USE WITH THIS DOCUMENT.

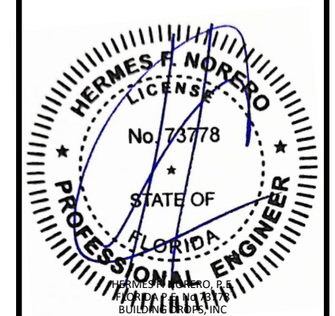

HERMES F. NORERO, P.E.
FLORIDA P.E. No. 73778
BUILDING DROPS, INC
1900 NE MIAMI COURT, STE. 2-15
MIAMI, FL 33132
FBPE CERT. OF AUTHORIZATION No. 29578

FL #: FL16981

DATE: 04.15.14

DWG. BY: TJM | CHK. BY: HFN

SCALE: NTS

DWG. #: YKK035

SHEET: 3 | REV. A

8/5/2026 8:49 PM
c:\cc-26-0247.1 - 2026 code change\dwgs\f116981\ykk035.dwg
c:\users\sebastianherreros\building drops, inc\building drops landing - common\projects\2026 code change projects\ykk ap america, inc\cc-26-0247.1

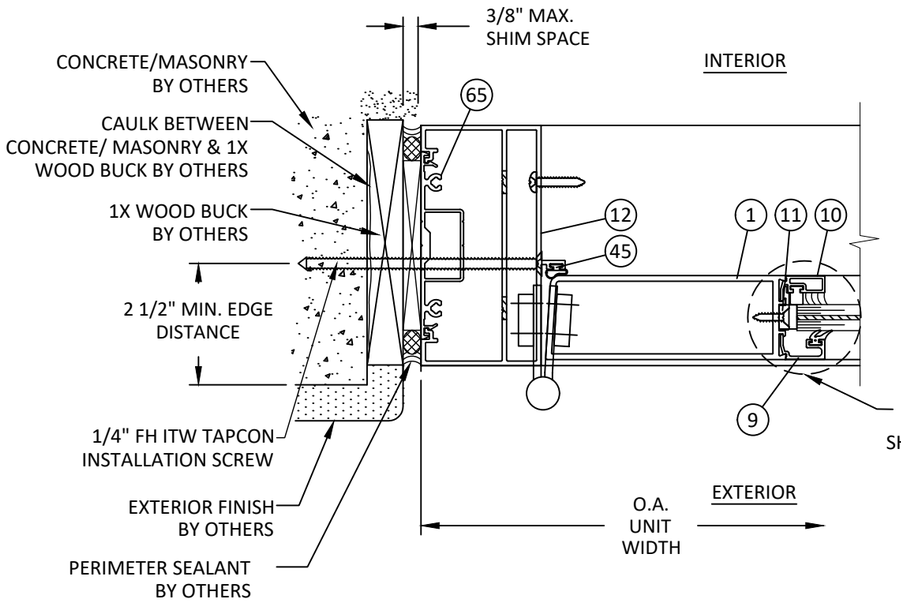

E/4 HORIZONTAL SECTION

DOOR JAMB - CONCRETE/MASONRY
STANDARD BUTT HINGE

NOTE:
GLASS STOP RETAINER (ITEM #11) IS TO BE SPACED 3" FROM CORNERS AND 22" MAX. O.C. THEREAFTER.

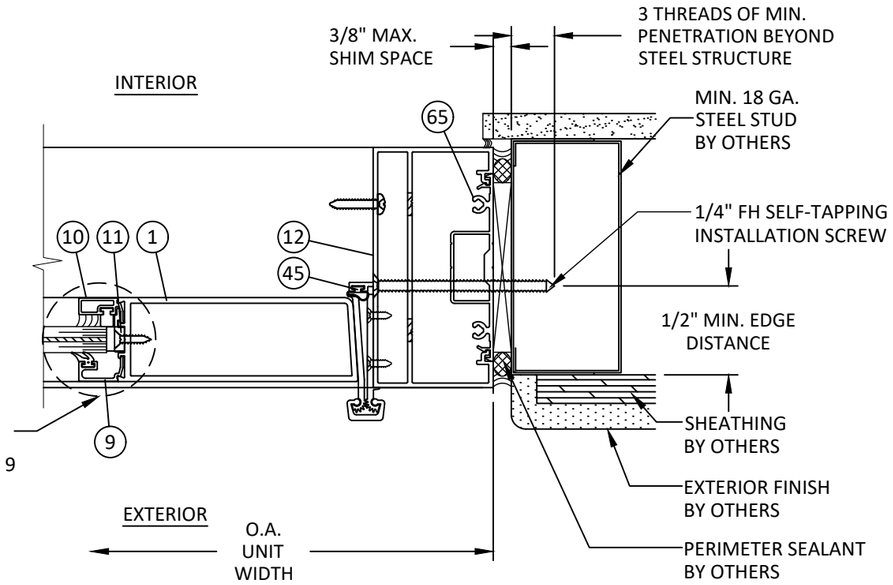

G/4 HORIZONTAL SECTION

DOOR JAMB - STEEL STUD
ROTON CONTINUOUS HINGE

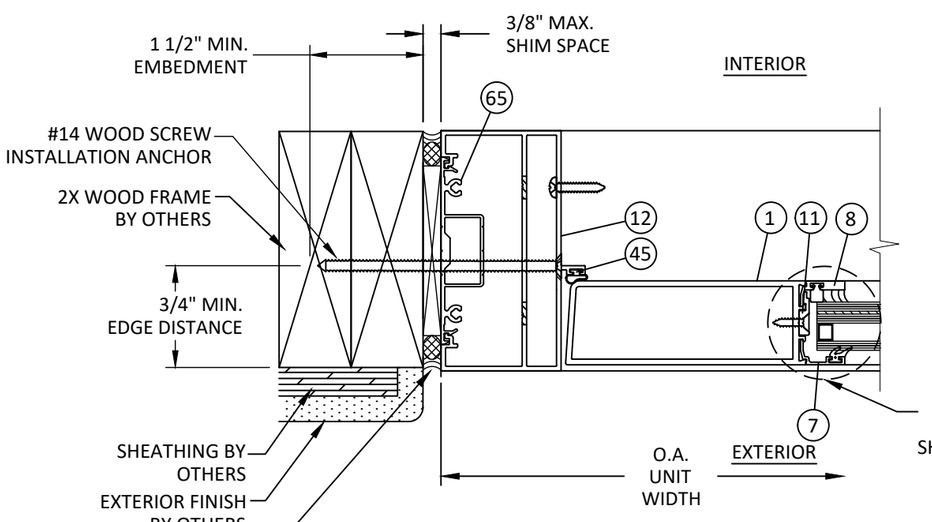

F/4 HORIZONTAL SECTION

DOOR JAMB - 2X WOOD FRAME

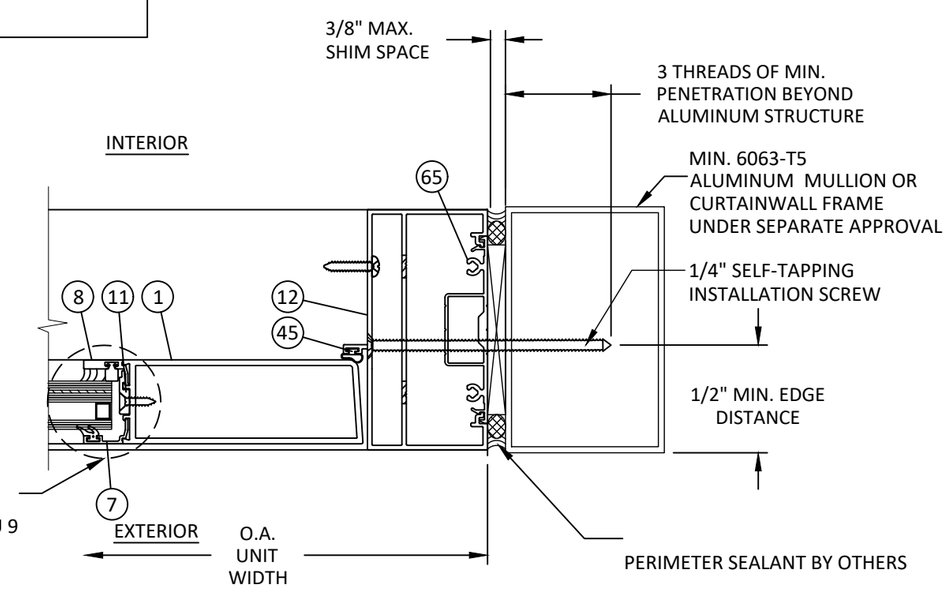

H/4 HORIZONTAL SECTION

DOOR JAMB - ALUMINUM STUD

YKK AP AMERICA, Inc.
101 MARIETTA STREET NW, SUITE 2100
ATLANTA, GA 30303
PH: (478)277-1955 FAX: (678)838-6001

TITLE:
50HL LOW PRESSURE OUTSWING ENTRANCE DOOR (WZ3) (IMPACT)
HORIZONTAL SECTIONS

PREPARED BY:
BUILDING DROPS, INC.
1900 NE MIAMI COURT, STE. 2-15
MIAMI, FL 33132
PH: (954)399-8478
FAX: (954)744.4738
WEB: www.buildingdrops.com

REMARKS	BY	DATE
2026 CODE UPDATE	SH	07.31.26

THE INSTALLATION DETAILS DESCRIBED HEREIN ARE GENERIC AND MAY NOT REFLECT ACTUAL CONDITIONS FOR A SPECIFIC SITE. IF SITE CONDITIONS CAUSE INSTALLATION TO DEVIATE FROM THE REQUIREMENTS DETAILED HEREIN, A LICENSED ENGINEER OR ARCHITECT SHALL PREPARE SITE SPECIFIC DOCUMENTS FOR USE WITH THIS DOCUMENT.

HERMES F. NORERO
LICENSE
No. 73778
STATE OF
FLORIDA
PROFESSIONAL ENGINEER

HERMES F. NORERO, P.E.
FLORIDA LICENSE NUMBER 73778
BUILDING DROPS, INC
1900 NE MIAMI COURT, STE. 2-15
MIAMI, FL 33132
FBPE CERT. OF AUTHORIZATION No. 29578

FL #: FL16981

DATE: 04.15.14

DWG. BY: TJM | CHK. BY: HFN

SCALE: NTS

DWG. #: YKK035

SHEET: 4 | REV. A

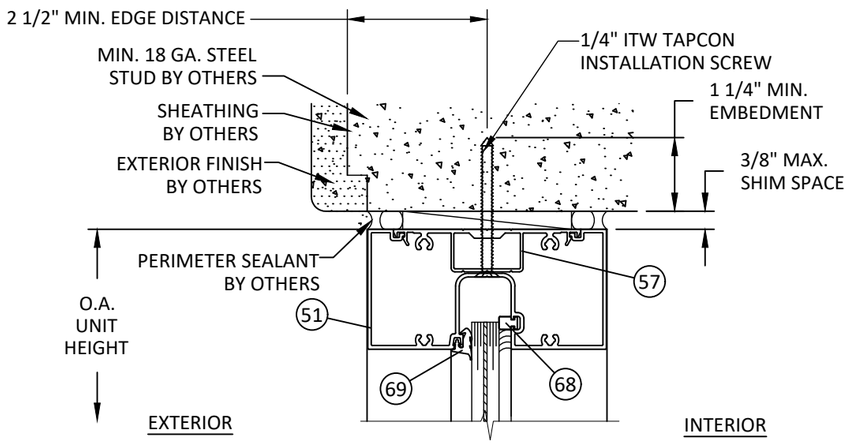

I/5 VERTICAL SECTION

HEAD - CONCRETE/MASONRY

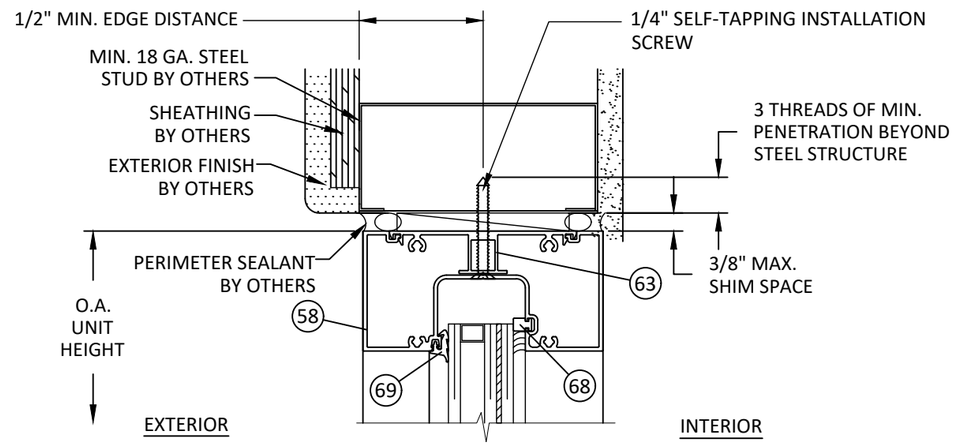

K/5 VERTICAL SECTION

HEAD - STEEL STUD

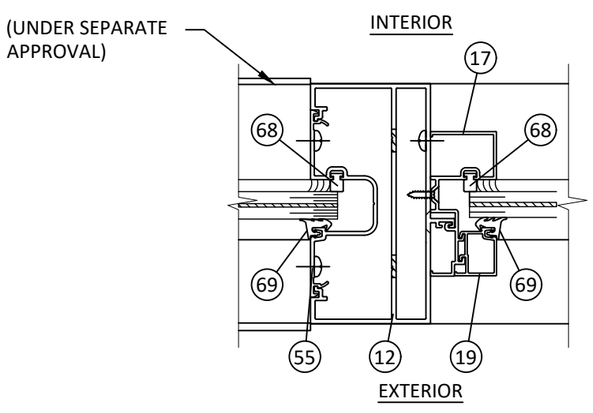

J/5 HORIZONTAL SECTION

TRANSOM JAMB - STOREFRONT INSTALLATION

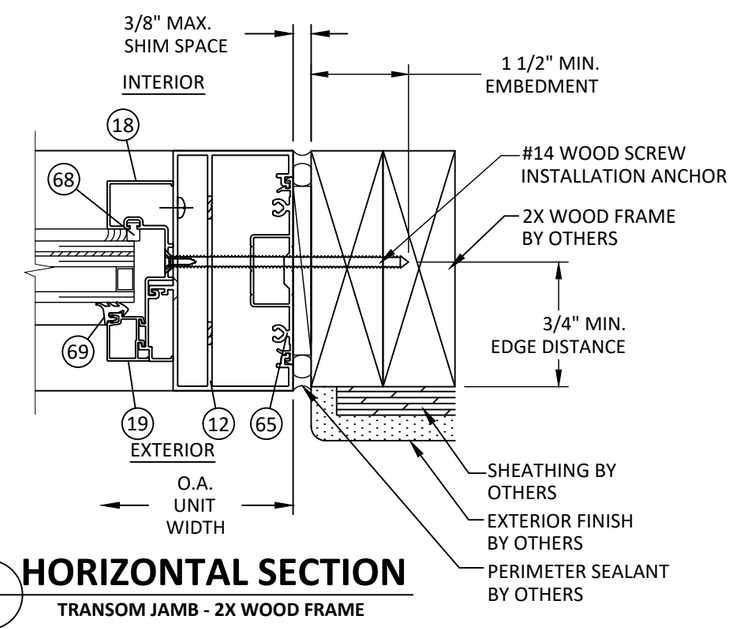

L/5 HORIZONTAL SECTION

TRANSOM JAMB - 2X WOOD FRAME

YKK AP AMERICA, Inc.
101 MARIETTA STREET NW, SUITE 2100
ATLANTA, GA 30303
PH: (478)277-1955 FAX: (678)838-6001

TITLE: 50HL LOW PRESSURE OUTSWING ENTRANCE DOOR (WZ3) (IMPACT) HORIZONTAL & VERTICAL SECTIONS (1)

PREPARED BY:
BUILDING DROPS, INC.
1900 NE MIAMI COURT, STE. 2-15
MIAMI, FL 33132
PH: (954)399-8478
FAX: (954)744.4738
WEB: www.buildingdrops.com

REMARKS	BY	DATE
2026 CODE UPDATE	SH	07.31.26

THE INSTALLATION DETAILS DESCRIBED HEREIN ARE GENERIC AND MAY NOT REFLECT ACTUAL CONDITIONS FOR A SPECIFIC SITE. IF SITE CONDITIONS CAUSE INSTALLATION TO DEVIATE FROM THE REQUIREMENTS DETAILED HEREIN, A LICENSED ENGINEER OR ARCHITECT SHALL PREPARE SITE SPECIFIC DOCUMENTS FOR USE WITH THIS DOCUMENT.

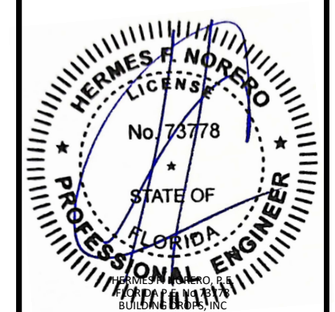

HERMES F. NORERO, P.E.
FLORIDA LICENSE NUMBER 73778
BUILDING DROPS, INC
1900 NE MIAMI COURT, STE. 2-15
MIAMI, FL 33132
FBPE CERT. OF AUTHORIZATION No. 29578

FL #:	FL16981
DATE:	04.15.14
DWG. BY: TJM	CHK. BY: HFN
SCALE:	NTS
DWG. #:	YKK035
SHEET: 5	REV. A

8/5/2026 8:49 PM
c:\users\sebastianherreros\building drops, inc\building drops landing - common\projects\2026 code change projects\ykk ap america, inc\cc-26-0247.1 - 2026 code change\dwgs\fl16981\ykk035.dwg

8/5/2026 8:49 PM
c:\cc-26-0247.1 - 2026 code change\dwgs\f116981\ykk035.dwg

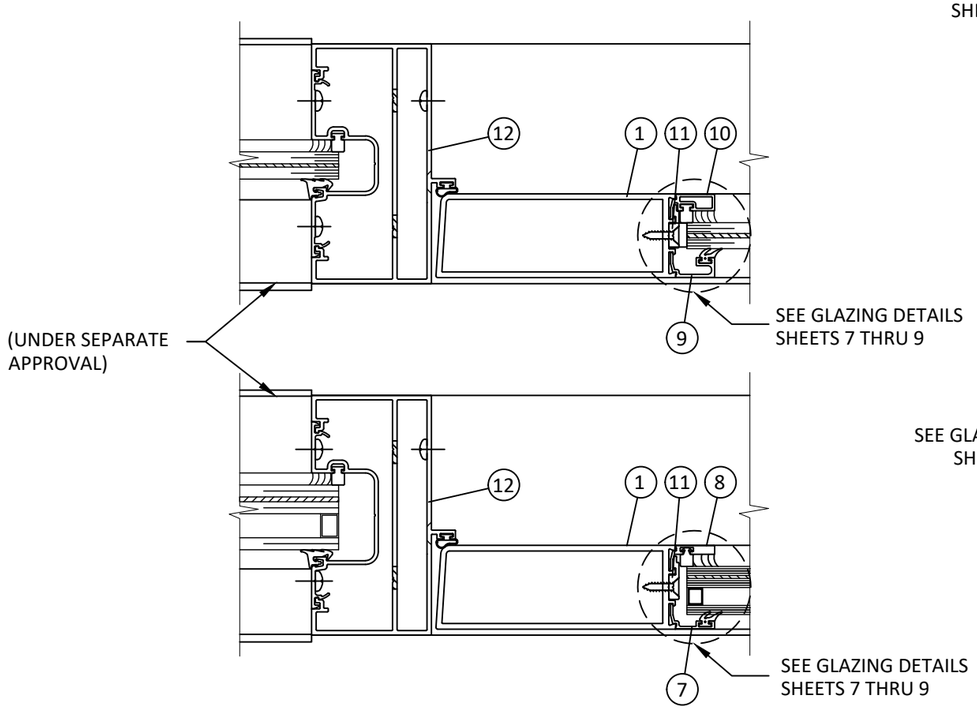

M 6 HORIZONTAL SECTION

DOOR JAMB - STOREFRONT INSTALLATION

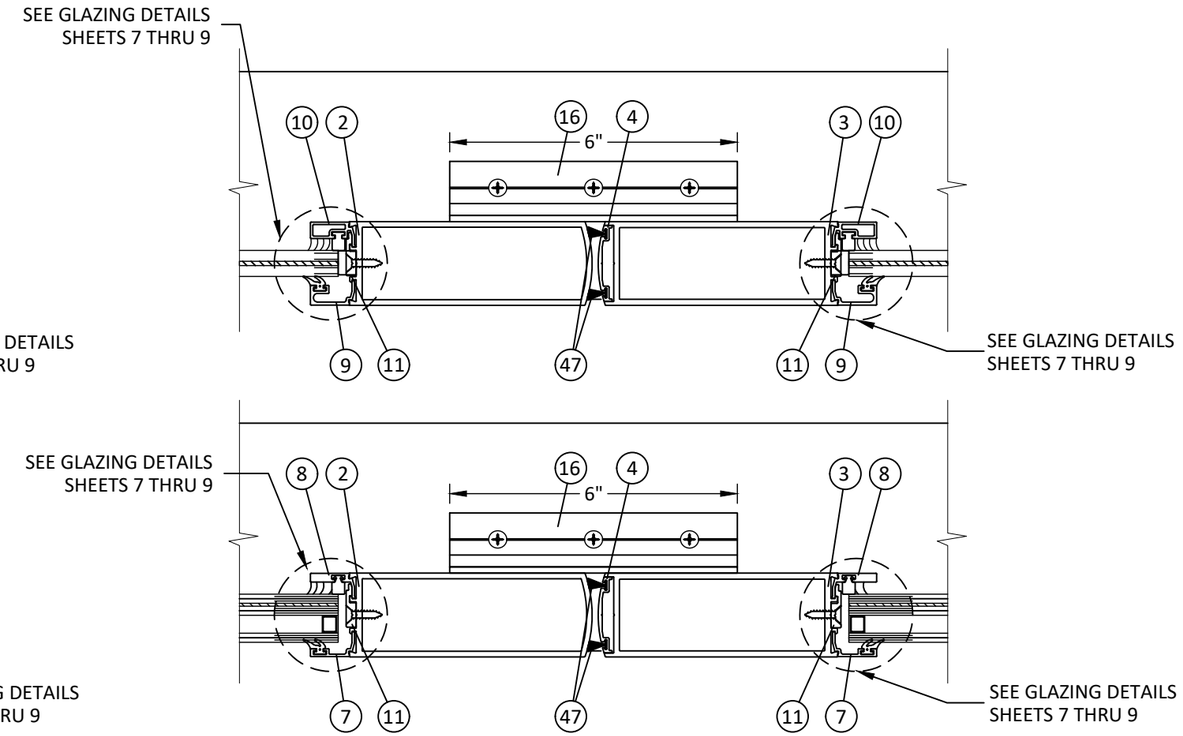

O 6 HORIZONTAL SECTION

MEETING STILE

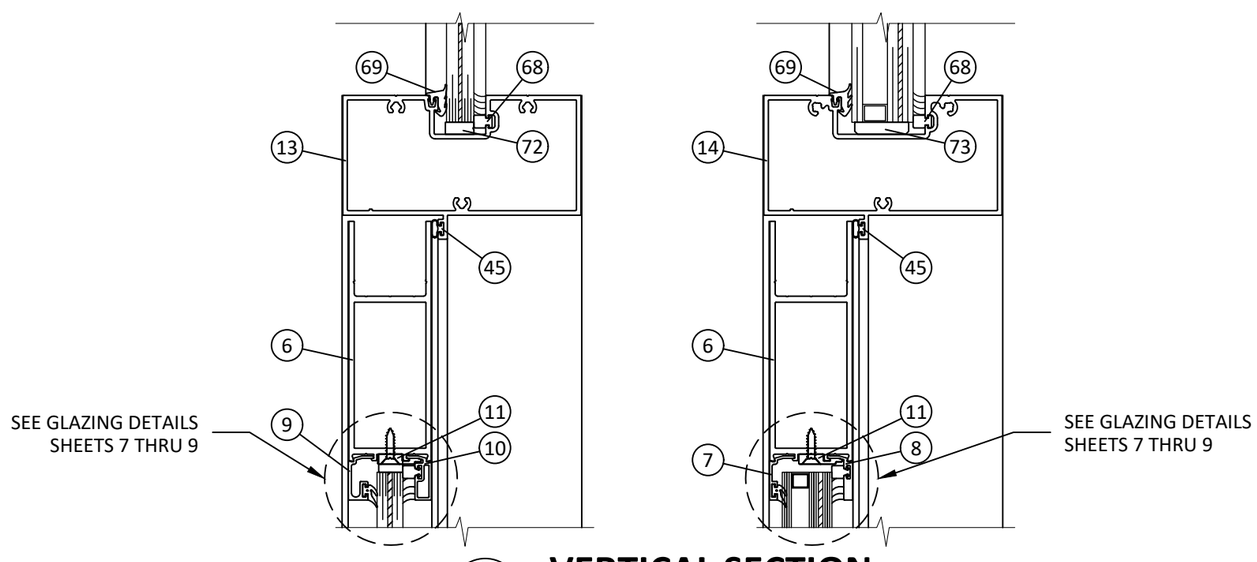

N 6 VERTICAL SECTION

TRANSOM BAR

YKK AP AMERICA, Inc.
101 MARIETTA STREET NW, SUITE 2100
ATLANTA, GA 30303
PH: (478)277-1955 FAX: (678)838-6001

TITLE:
50HL LOW PRESSURE OUTSWING
ENTRANCE DOOR
(WZ3) (IMPACT)
HORIZONTAL &
VERTICAL SECTIONS (2)

PREPARED BY:
BUILDING DROPS, INC.
1900 NE MIAMI COURT, STE. 2-15
MIAMI, FL 33132
PH: (954)399-8478
FAX: (954)744.4738
WEB: www.buildingdrops.com

REMARKS	BY	DATE
2026 CODE UPDATE	SH	07.31.26

THE INSTALLATION DETAILS DESCRIBED HEREIN ARE GENERIC AND MAY NOT REFLECT ACTUAL CONDITIONS FOR A SPECIFIC SITE. IF SITE CONDITIONS CAUSE INSTALLATION TO DEVIATE FROM THE REQUIREMENTS DETAILED HEREIN, A LICENSED ENGINEER OR ARCHITECT SHALL PREPARE SITE SPECIFIC DOCUMENTS FOR USE WITH THIS DOCUMENT.

HERMES F. NORERO
LICENSE
No. 73778
STATE OF
FLORIDA
PROFESSIONAL ENGINEER

HERMES F. NORERO P.E.
FLORIDA LIC. No. 73778
BUILDING DROPS, INC
1900 NE MIAMI COURT, STE. 2-15
MIAMI, FL 33132
FBPE CERT. OF AUTHORIZATION No. 29578

FL #: FL16981

DATE: 04.15.14

DWG. BY: TJM | CHK. BY: HFN

SCALE: NTS

DWG. #: YKK035

SHEET: 6 | REV. A

OF 11

LARGE & SMALL MISSILE IMPACT

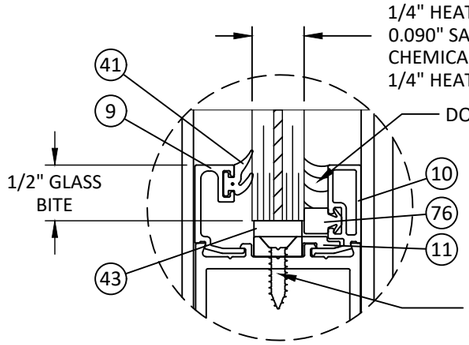

9/16" O.A. LAMINATED GLASS
1/4" HEAT STRENGTHENED GLASS
0.090" SAFLEX PVB INTERLAYER BY EASTMAN CHEMICAL CO. FORMERLY KNOWN AS SOLUTIA
1/4" HEAT STRENGTHENED GLASS

DOW CORNING 995

#10 X ¾" TEK SCREW SPACED 3" FROM CORNERS, 14 7/16" MAX. O.C. AT HEAD/SILL, AND 22" MAX. O.C. AT JAMBS.

GLAZING DETAIL A
WET GLAZED

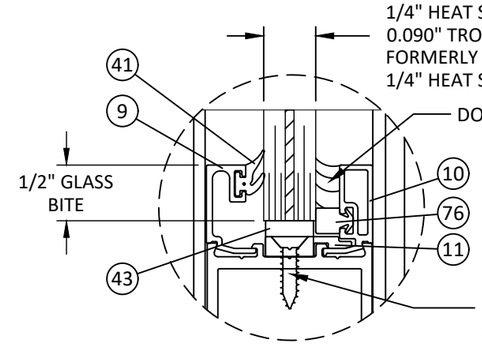

9/16" O.A. LAMINATED GLASS
1/4" HEAT STRENGTHENED GLASS
0.090" TROSIFOL PVB INTERLAYER BY KURARAY FORMERLY KNOWN AS BUTACITE PVB BY DUPONT
1/4" HEAT STRENGTHENED GLASS

DOW CORNING 995

#10 X ¾" TEK SCREW SPACED 3" FROM CORNERS, 14 7/16" MAX. O.C. AT HEAD/SILL, AND 22" MAX. O.C. AT JAMBS.

GLAZING DETAIL B
WET GLAZED

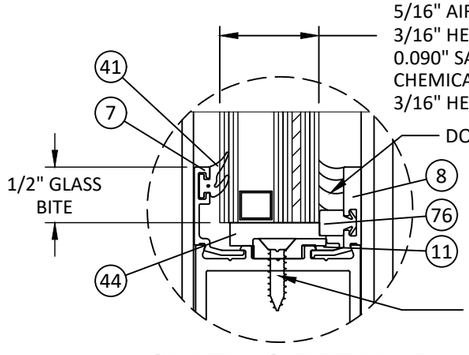

1" O.A. LAMINATED GLASS
3/16" FULLY TEMPERED GLASS
5/16" AIR SPACE
3/16" HEAT STRENGTHENED GLASS
0.090" SAFLEX PVB INTERLAYER BY EASTMAN CHEMICAL CO. FORMERLY KNOWN AS SOLUTIA
3/16" HEAT STRENGTHENED GLASS

DOW CORNING 995

#10 X ¾" TEK SCREW SPACED 3" FROM CORNERS, 14 7/16" MAX. O.C. AT HEAD/SILL, AND 22" MAX. O.C. AT JAMBS.

GLAZING DETAIL E
WET GLAZED

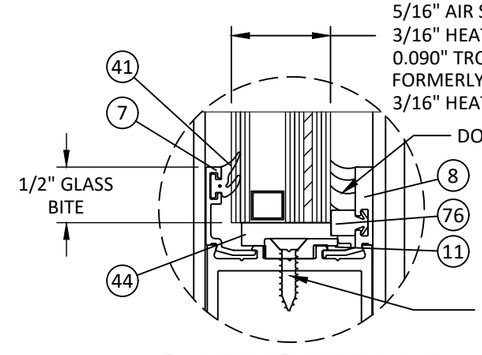

1" O.A. LAMINATED GLASS
3/16" FULLY TEMPERED GLASS
5/16" AIR SPACE
3/16" HEAT STRENGTHENED GLASS
0.090" TROSIFOL PVB INTERLAYER BY KURARAY FORMERLY KNOWN AS BUTACITE PVB BY DUPONT
3/16" HEAT STRENGTHENED GLASS

DOW CORNING 995

#10 X ¾" TEK SCREW SPACED 3" FROM CORNERS, 14 7/16" MAX. O.C. AT HEAD/SILL, AND 22" MAX. O.C. AT JAMBS.

GLAZING DETAIL F
WET GLAZED

NOTES:
1. GLASS THICKNESS AND TYPE SHALL COMPLY WITH ASTM E 1300 GLASS CHART REQUIREMENTS.
2. ALL GLAZING CONFIGURATIONS SHALL COMPLY WITH SAFETY GLAZING REQUIREMENTS OUTLINED IN THE FBC.
3. ALL LITES GREATER THAN 36" IN WIDTH SHALL UTILIZE SETTING BLOCKS IN ACCORDANCE WITH THE FBC. CH. 24
4. SETTING BLOCK DUROMETER HARDNESS OF 70-90 (SHORE A) AS REFERENCED IN CHAPTER 24.

AIR SPACE CONSISTING OF :
- SPACER: ALUMINUM BOX SPACER.
- PRIMARY SEALANT: POLYISOBUTYLENE (PIB).
- SECONDARY SEALANT: STRUCTURAL SILICONE INTENDED FOR FABRICATION OF INSULATING GLASS UNITS.

YKK AP AMERICA, Inc.
101 MARIETTA STREET NW, SUITE 2100
ATLANTA, GA 30303
PH: (478)277-1955 FAX: (678)838-6001

TITLE: 50HL LOW PRESSURE OUTSWING ENTRANCE DOOR (WZ3) (IMPACT)
GLAZING DETAILS (1)

PREPARED BY:
BUILDING DROPS, INC.
1900 NE MIAMI COURT, STE. 2-15
MIAMI, FL 33132
PH: (954)399-8478
FAX: (954)744.4738
WEB: www.buildingdrops.com

REMARKS	BY	DATE
2026 CODE UPDATE	SH	07.31.26

THE INSTALLATION DETAILS DESCRIBED HEREIN ARE GENERIC AND MAY NOT REFLECT ACTUAL CONDITIONS FOR A SPECIFIC SITE. IF SITE CONDITIONS CAUSE INSTALLATION TO DEVIATE FROM THE REQUIREMENTS DETAILED HEREIN, A LICENSED ENGINEER OR ARCHITECT SHALL PREPARE SITE SPECIFIC DOCUMENTS FOR USE WITH THIS DOCUMENT.

HERMES F. NORERO LICENSE No. 73778 STATE OF FLORIDA PROFESSIONAL ENGINEER

HERMES F. NORERO, P.E.
FLORIDA P.E. No. 73778
BUILDING DROPS, INC
1900 NE MIAMI COURT, STE. 2-15
MIAMI, FL 33132
FBPE CERT. OF AUTHORIZATION No. 29578

FL #: FL16981
DATE: 04.15.14
DWG. BY: TJM
CHK. BY: HFN
SCALE: NTS
DWG. #: YKK035
SHEET: 7 OF 11
REV. A

8/5/2026 8:49 PM
c:\users\sebastianherreros\building drops, inc\building drops landing - common\projects\2026 code change projects\ykk ap america, inc\cc-26-0247.1 - 2026 code change\dwgs\fl16981\ykk035.dwg

LARGE & SMALL MISSILE IMPACT

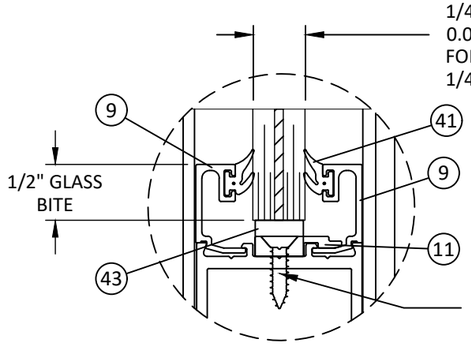

GLAZING DETAIL I
DRY GLAZED

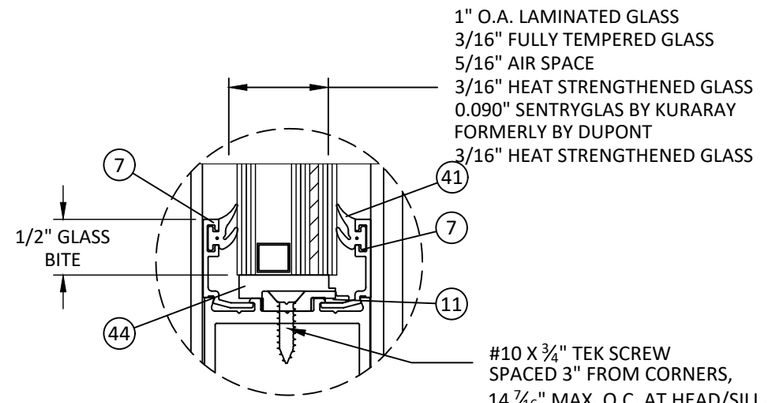

GLAZING DETAIL J
DRY GLAZED

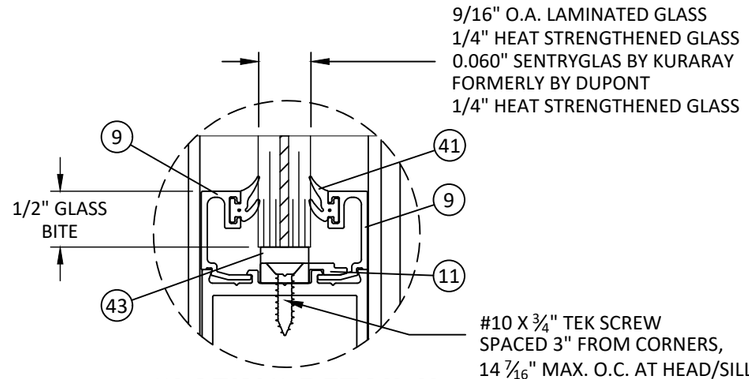

GLAZING DETAIL K
DRY GLAZED

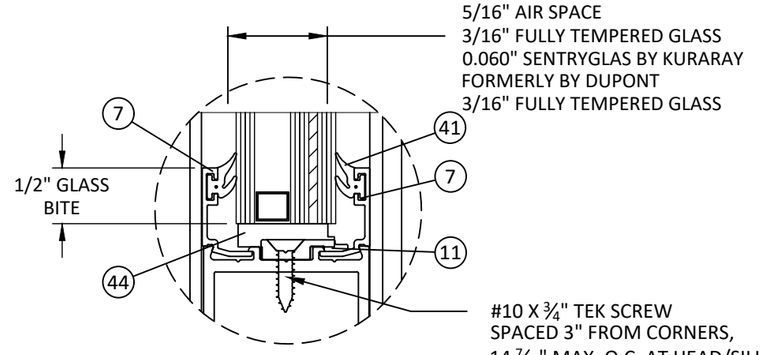

GLAZING DETAIL L
DRY GLAZED

NOTES:
1. GLASS THICKNESS AND TYPE SHALL COMPLY WITH ASTM E 1300 GLASS CHART REQUIREMENTS.
2. ALL GLAZING CONFIGURATIONS SHALL COMPLY WITH SAFETY GLAZING REQUIREMENTS OUTLINED IN THE FBC.
3. ALL LITES GREATER THAN 36" IN WIDTH SHALL UTILIZE SETTING BLOCKS IN ACCORDANCE WITH THE FBC. CH. 24
4. SETTING BLOCK DUROMETER HARDNESS OF 70-90 (SHORE A) AS REFERENCED IN CHAPTER 24.

AIR SPACE CONSISTING OF :
- SPACER: ALUMINUM BOX SPACER.
- PRIMARY SEALANT: POLYISOBUTYLENE (PIB).
- SECONDARY SEALANT: STRUCTURAL SILICONE INTENDED FOR FABRICATION OF INSULATING GLASS UNITS.

YKK AP AMERICA, Inc.
101 MARIETTA STREET NW, SUITE 2100
ATLANTA, GA 30303
PH: (478)277-1955 FAX: (678)838-6001

TITLE: 50HL LOW PRESSURE OUTSWING ENTRANCE DOOR (WZ3) (IMPACT)
GLAZING DETAILS (2)

PREPARED BY:
BUILDING DROPS, INC.
1900 NE MIAMI COURT, STE. 2-15
MIAMI, FL 33132
PH: (954)399-8478
FAX: (954)744.4738
WEB: www.buildingdrops.com

REMARKS	BY	DATE
2026 CODE UPDATE	SH	07.31.26

THE INSTALLATION DETAILS DESCRIBED HEREIN ARE GENERIC AND MAY NOT REFLECT ACTUAL CONDITIONS FOR A SPECIFIC SITE. IF SITE CONDITIONS CAUSE INSTALLATION TO DEVIATE FROM THE REQUIREMENTS DETAILED HEREIN, A LICENSED ENGINEER OR ARCHITECT SHALL PREPARE SITE SPECIFIC DOCUMENTS FOR USE WITH THIS DOCUMENT.

HERMES F. NORERO
LICENSE
No. 73778
STATE OF FLORIDA
PROFESSIONAL ENGINEER

HERMES F. NORERO, P.E.
FLORIDA LICENSE No. 73778
BUILDING DROPS, INC
1900 NE MIAMI COURT, STE. 2-15
MIAMI, FL 33132
FBPE CERT. OF AUTHORIZATION No. 29578

FL #: FL16981

DATE: 04.15.14

DWG. BY: TJM | CHK. BY: HFN

SCALE: NTS

DWG. #: YKK035

SHEET: 8 OF 11

REV. A

8/5/2026 8:49 PM
c:\users\sebastianherreros\building drops, inc\building drops landing - common\projects\2026 code change projects\ykk ap america, inc\cc-26-02471 - 2026 code change\dwgs\f116981\ykk035.dwg

SMALL MISSILE IMPACT ONLY

9/16" O.A. LAMINATED GLASS
1/4" HEAT STRENGTHENED GLASS
0.060" TROSIFOL PVB INTERLAYER BY KURARAY
FORMERLY KNOWN AS BUTACITE PVB BY DUPONT
1/4" HEAT STRENGTHENED GLASS

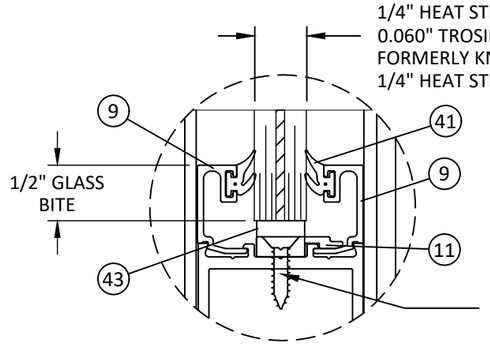

#10 X ¾" TEK SCREW
SPACED 3" FROM CORNERS,
14 7/16" MAX. O.C. AT HEAD/SILL,
AND 22" MAX. O.C. AT JAMBS.

GLAZING DETAIL C
DRY GLAZED

9/16" O.A. LAMINATED GLASS
1/4" HEAT STRENGTHENED GLASS
0.060" SAFLEX PVB INTERLAYER BY EASTMAN
CHEMICAL CO. FORMERLY KNOWN AS SOLUTIA
1/4" HEAT STRENGTHENED GLASS

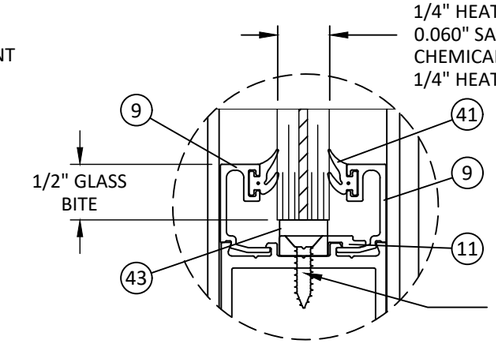

#10 X ¾" TEK SCREW
SPACED 3" FROM CORNERS,
14 7/16" MAX. O.C. AT HEAD/SILL,
AND 22" MAX. O.C. AT JAMBS.

GLAZING DETAIL D
DRY GLAZED

1" O.A. LAMINATED GLASS
3/16" FULLY TEMPERED GLASS
5/16" AIR SPACE
3/16" HEAT STRENGTHENED GLASS
0.060" SAFLEX PVB INTERLAYER BY EASTMAN
CHEMICAL CO. FORMERLY KNOWN AS SOLUTIA
3/16" HEAT STRENGTHENED GLASS

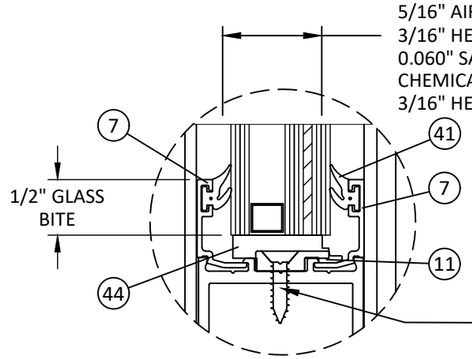

#10 X ¾" TEK SCREW
SPACED 3" FROM CORNERS,
14 7/16" MAX. O.C. AT HEAD/SILL,
AND 22" MAX. O.C. AT JAMBS.

GLAZING DETAIL G
DRY GLAZED

1" O.A. LAMINATED GLASS
3/16" FULLY TEMPERED GLASS
5/16" AIR SPACE
3/16" HEAT STRENGTHENED GLASS
0.060" TROSIFOL PVB INTERLAYER BY KURARAY
FORMERLY KNOWN AS BUTACITE PVB BY DUPONT
3/16" HEAT STRENGTHENED GLASS

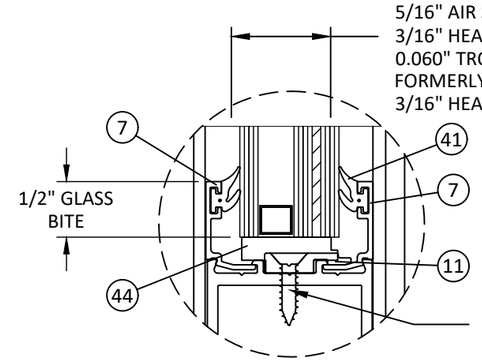

#10 X ¾" TEK SCREW
SPACED 3" FROM CORNERS,
14 7/16" MAX. O.C. AT HEAD/SILL,
AND 22" MAX. O.C. AT JAMBS.

GLAZING DETAIL H
DRY GLAZED

NOTES:
1. GLASS THICKNESS AND TYPE SHALL COMPLY WITH ASTM E 1300 GLASS CHART REQUIREMENTS.
2. ALL GLAZING CONFIGURATIONS SHALL COMPLY WITH SAFETY GLAZING REQUIREMENTS OUTLINED IN THE FBC.
3. ALL LITES GREATER THAN 36" IN WIDTH SHALL UTILIZE SETTING BLOCKS IN ACCORDANCE WITH THE FBC. CH. 24
4. SETTING BLOCK DUROMETER HARDNESS OF 70-90 (SHORE A) AS REFERENCED IN CHAPTER 24.

AIR SPACE CONSISTING OF :
- SPACER: ALUMINUM BOX SPACER.
- PRIMARY SEALANT: POLYISOBUTYLENE (PIB).
- SECONDARY SEALANT: STRUCTURAL SILICONE INTENDED FOR FABRICATION OF INSULATING GLASS UNITS.

YKK AP AMERICA, Inc.
101 MARIETTA STREET NW, SUITE 2100
ATLANTA, GA 30303
PH: (478)277-1955 FAX: (678)838-6001

TITLE: 50HL LOW PRESSURE OUTSWING ENTRANCE DOOR (WZ3) (IMPACT)
GLAZING DETAILS (3)

PREPARED BY:
BUILDING DROPS, INC.
1900 NE MIAMI COURT, STE. 2-15
MIAMI, FL 33132
PH: (954)399-8478
FAX: (954)744.4738
WEB: www.buildingdrops.com

REMARKS	BY	DATE
2026 CODE UPDATE	SH	07.31.26

THE INSTALLATION DETAILS DESCRIBED HEREIN ARE GENERIC AND MAY NOT REFLECT ACTUAL CONDITIONS FOR A SPECIFIC SITE. IF SITE CONDITIONS CAUSE INSTALLATION TO DEVIATE FROM THE REQUIREMENTS DETAILED HEREIN, A LICENSED ENGINEER OR ARCHITECT SHALL PREPARE SITE SPECIFIC DOCUMENTS FOR USE WITH THIS DOCUMENT.

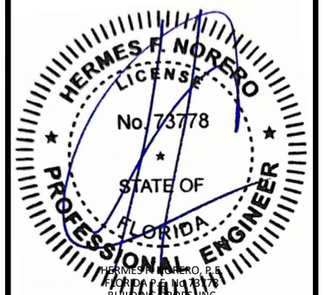

HERMES F. NORERO, P.E.
FLORIDA P.E. No. 73778
BUILDING DROPS, INC
1900 NE MIAMI COURT, STE. 2-15
MIAMI, FL 33132
FBPE CERT. OF AUTHORIZATION No. 29578

FL #: FL16981
DATE: 04.15.14
DWG. BY: TJM
CHK. BY: HFN
SCALE: NTS
DWG. #: YKK035
SHEET: 9
REV. A
OF 11

8/5/2026 8:49 PM
c:\users\sebastianherreros\building drops, inc\building drops landing - common\projects\2026 code change projects\ykk ap america, inc\cc-26-0247.1 - 2026 code change\dwgs\f116981\ykk035.dwg

ITEM	PART NO.	DESCRIPTION	MATERIAL	MANUFACTURER
1	E9-0311	JAMB STILE	6063-T5	YKK AP
2	E9-0313	MEETING STILE (INACTIVE)	6063-T5	YKK AP
3	E9-0331	MEETING STILE (ACTIVE)	6063-T5	YKK AP
4	E9-0332	MEETING STILE COVER	6063-T5	YKK AP
5	E9-0317	8" BOTTOM RAIL	6063-T5	YKK AP
5A	E9-0323	10" BOTTOM RAIL	6063-T5	YKK AP
6	E9-0334	TOP RAIL	6063-T5	YKK AP
7	E9-0203	EXTERIOR GLASS STOP (1" GL)	6063-T5	YKK AP
8	E9-0204	INTERIOR GLASS STOP (1" GL)	6063-T5	YKK AP
9	E9-0201	EXTERIOR GLASS STOP (9/16" GL)	6063-T5	YKK AP
10	E9-0202	INTERIOR GLASS STOP (9/16" GL)	6063-T5	YKK AP
11	E1-1137	GLASS STOP RETAINER	6063-T5	YKK AP
12	E9-0551	DOOR JAMB	6063-T5	YKK AP
13	E9-0552	TRANSOM BAR (MONO)	6063-T5	YKK AP
14	E9-0553	TRANSOM BAR (INS)	6063-T5	YKK AP
15	E9-0407	4" THRESHOLD	6063-T5	YKK AP
16	E1-1138	DOOR STOP	6063-T5	YKK AP
17	E9-0554	TRANSOM ADAPTOR (MONO)	6063-T5	YKK AP
18	E9-0555	TRANSOM ADAPTOR (INS)	6063-T5	YKK AP
19	E9-0506	TRANSOM GLASS STOP	6063-T5	YKK AP
24	E1-0324	LOCK BASE	STEEL	---
25	E1-0320	HINGE BACKER PLATE	6063-T5	YKK AP
26	E1-0311	SHEAR BLOCK BACKER PLATE	ZINC PLATED STEEL	---
27	E1-0312	SHEAR BLOCK BACKER PLATE	ZINC PLATED STEEL	---
28	E1-0309	JOINT CLIP	6063-T5	YKK AP
29	E1-0310	JOINT CLIP	6063-T6	YKK AP
30	E1-0307	THRESHOLD CLIP	6063-T5	YKK AP
31	E1-0331	FLUSHBOLT	---	---
32	E1-0322	FLUSHBOLT GUIDE	---	---
33	E1-0319	FLUSHBOLT STRIKE	---	---
35	E1-0300	BOTTOM PIVOT FOR FRAME (R)	---	---
36	E1-0301	BOTTOM PIVOT FOR FRAME (L)	---	---
37	E1-0302	BOTTOM PIVOT FOR DOOR	---	---
38	E1-0303	TOP PIVOT FOR FRAME	---	---
39	E1-0304	TOP PIVOT FOR DOOR	---	---
41	E2-0050	DOOR GASKET	EPDM	---
42	E2-0062	DOOR FRAME WEATHERSEAL	POLYPROPYLENE	---
43	E2-0054	DOOR SETTING BLOCK (MONO)	EPDM (85±5)	---
44	E2-0055	DOOR SETTING BLOCK (INS)	EPDM (85±5)	---
45	E2-0051	AIRTIGHT GASKET	SANTOPRENE	---
47	E2-0087	DOOR WEATHERSEAL	POLYPROPYLENE	---
50	E2-0060	FACE PLATE SPACER	POLYPROPYLENE	---
51	E9-0601	HEAD / JAMB / VERTICAL (MONO)	6063-T6	YKK AP
55	E9-0606	DEEP POCKET FILLER (MONO)	6063-T5	YKK AP
57	E1-1071	ANCHOR FILLER	6063-T5	YKK AP
58	E9-0651	HEAD / JAMB / VERTICAL (INS)	6063-T6	YKK AP
63	E1-1073	ANCHOR FILLER	6063-T5	YKK AP
65	E1-1068	ANCHOR FILLER	6063-T5	YKK AP
68	E2-0084	INTERIOR SILICONE SPACER	SILICONE	---
69	E2-0083	EXTERIOR GLAZING GASKET	EPDM	---
70	E2-0088	INTERIOR GLAZING GASKET (DRY GLAZED)	EPDM	---
72	E2-0737	TRANSOM SETTING BLOCK (MONO)	EPDM (85±5)	---
73	E2-0134	TRANSOM SETTING BLOCK (INS)	EPDM (85±5)	---
76	E2-0085	DOOR & REGLAZE SILICONE SPACER	EPDM	---

1 JAMB STILE

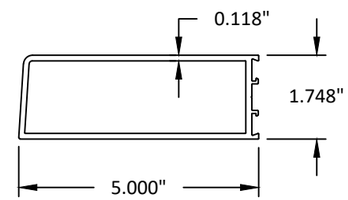

2 MEETING STILE (INACTIVE)

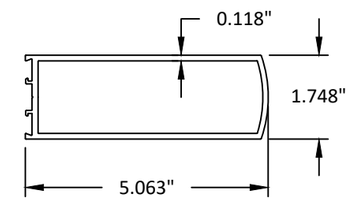

3 MEETING STILE (ACTIVE)

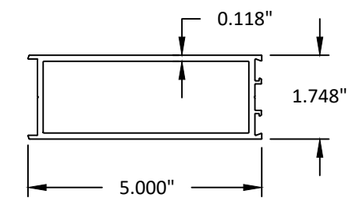

4 MEETING STILE COVER

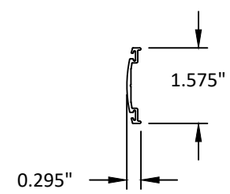

6 TOP RAIL

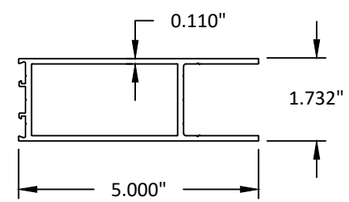

7 EXT. GLASS STOP (1")

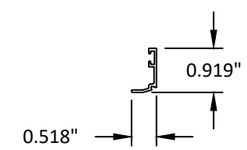

8 INT. GLASS STOP (1")

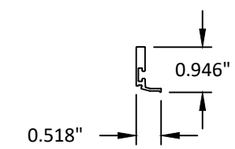

9 EXT. GLASS STOP (9/16")

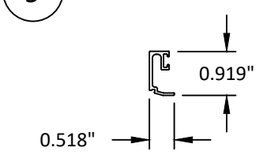

10 INT. GLASS STOP (9/16")

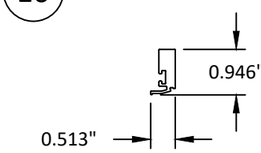

11 GLASS STOP RETAINER

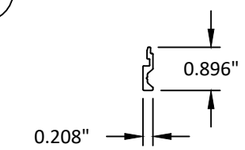

5A 10" BOTTOM RAIL

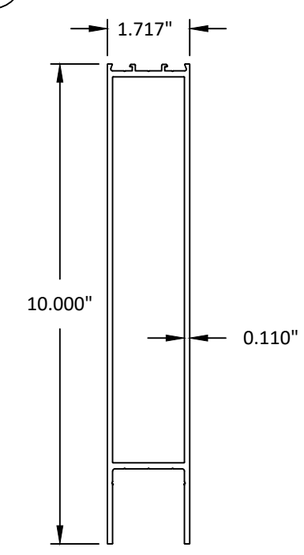

12 DOOR JAMB

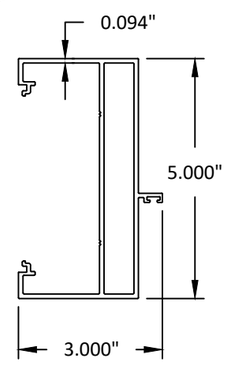

5 8" BOTTOM RAIL

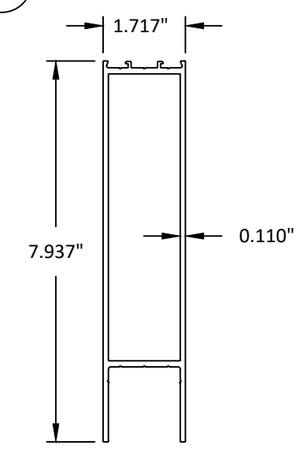

YKK AP AMERICA, Inc.
101 MARIETTA STREET NW, SUITE 2100
ATLANTA, GA 30303
PH: (478)277-1955 FAX: (678)838-6001

TITLE: 50HL LOW PRESSURE OUTSWING ENTRANCE DOOR (WZ3) (IMPACT) COMPONENTS & BILL OF MATERIALS

PREPARED BY: BUILDING DROPS, INC.
1900 NE MIAMI COURT, STE. 2-15
MIAMI, FL 33132
PH: (954)399-8478
FAX: (954)744.4738
WEB: www.buildingdrops.com

REMARKS	BY	DATE
2026 CODE UPDATE	SH	07.31.26

THE INSTALLATION DETAILS DESCRIBED HEREIN ARE GENERIC AND MAY NOT REFLECT ACTUAL CONDITIONS FOR A SPECIFIC SITE. IF SITE CONDITIONS CAUSE INSTALLATION TO DEVIATE FROM THE REQUIREMENTS DETAILED HEREIN, A LICENSED ENGINEER OR ARCHITECT SHALL PREPARE SITE SPECIFIC DOCUMENTS FOR USE WITH THIS DOCUMENT.

HERMES F. NORERO LICENSE No. 73778 STATE OF FLORIDA PROFESSIONAL ENGINEER

HERMES F. NORERO, P.E.
LICENSE No. 73778
BUILDING DROPS, INC
1900 NE MIAMI COURT, STE. 2-15
MIAMI, FL 33132
FBPE CERT. OF AUTHORIZATION No. 29578

FL #: FL16981

DATE: 04.15.14

DWG. BY: TJM | CHK. BY: HFN

SCALE: NTS

DWG. #: YKK035

SHEET: 10 OF 11 | REV. A

8/5/2026 8:49 PM
c:\users\sebastianherreros\building drops, inc\building drops landing - common\projects\2026 code change projects\ykk ap america, inc\cc-26-0247.1 - 2026 code change\dwgs\fl16981\ykk035.dwg

8/5/2026 8:49 PM
c:\users\sebastianherreros\building drops, inc\building drops landing - common\projects\2026 code change projects\ykk ap america, inc\cc-26-0247.1 - 2026 code change\dwgs\fl16981\ykk035.dwg

13 TRANSOM BAR (MONO)

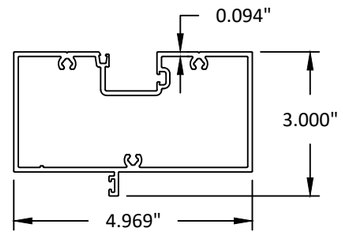

14 TRANSOM BAR (INS)

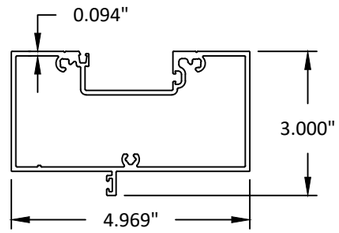

15 4" THRESHOLD

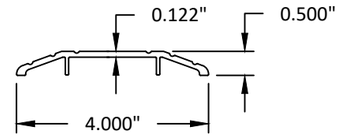

16 DOOR STOP

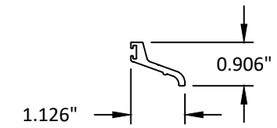

17 TRANSOM ADAPTOR (MONO)

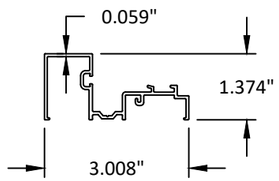

18 TRANSOM ADAPTOR (INS)

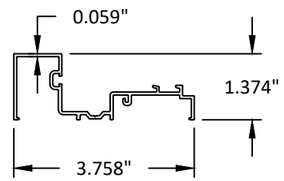

19 TRANSOM GLASS STOP

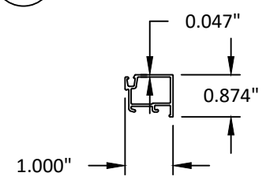

25 HINGE BACKER PLATE

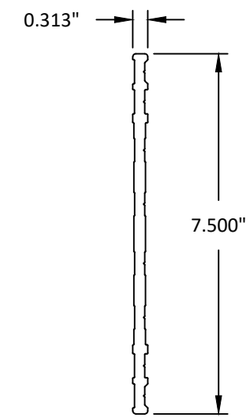

28 29 JOINT CLIP

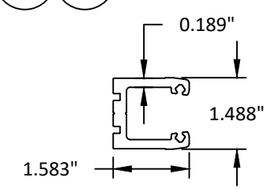

51 HEAD/JAMB/MULLION (MONO)

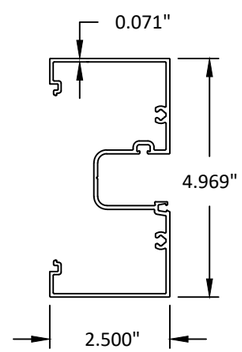

55 DEEP POCKET FILLER (MONO)

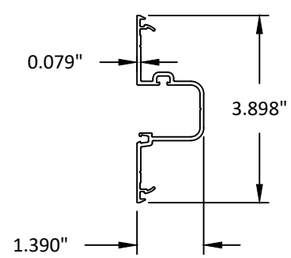

58 HEAD/JAMB/MULLION (INS)

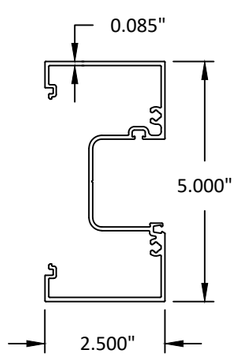

63 ANCHOR FILLER

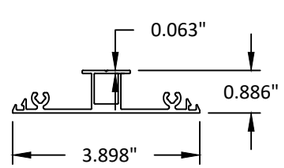

57 65 ANCHOR FILLER

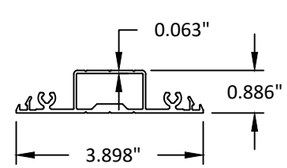

YKK AP AMERICA, Inc.
101 MARIETTA STREET NW, SUITE 2100
ATLANTA, GA 30303
PH: (478)277-1955 FAX: (678)838-6001

TITLE: 50HL LOW PRESSURE OUTSWING ENTRANCE DOOR (WZ3) (IMPACT) COMPONENTS (CONTINUED)

PREPARED BY: BUILDING DROPS, INC.
1900 NE MIAMI COURT, STE. 2-15
MIAMI, FL 33132
PH: (954)399-8478
FAX: (954)744.4738
WEB: www.buildingdrops.com

REMARKS	BY	DATE
2026 CODE UPDATE	SH	07.31.26

THE INSTALLATION DETAILS DESCRIBED HEREIN ARE GENERIC AND MAY NOT REFLECT ACTUAL CONDITIONS FOR A SPECIFIC SITE. IF SITE CONDITIONS CAUSE INSTALLATION TO DEVIATE FROM THE REQUIREMENTS DETAILED HEREIN, A LICENSED ENGINEER OR ARCHITECT SHALL PREPARE SITE SPECIFIC DOCUMENTS FOR USE WITH THIS DOCUMENT.

HERMES F. NORERO LICENSE No. 73778 STATE OF FLORIDA PROFESSIONAL ENGINEER

HERMES F. NORERO, P.E.
FLORIDA P.E. No. 73778
BUILDING DROPS, INC
1900 NE MIAMI COURT, STE. 2-15
MIAMI, FL 33132
FBPE CERT. OF AUTHORIZATION No. 29578

FL #: FL16981

DATE: 04.15.14

DWG. BY: TJM | CHK. BY: HFN

SCALE: NTS

DWG. #: YKK035

SHEET: 11 OF 11 | REV. A